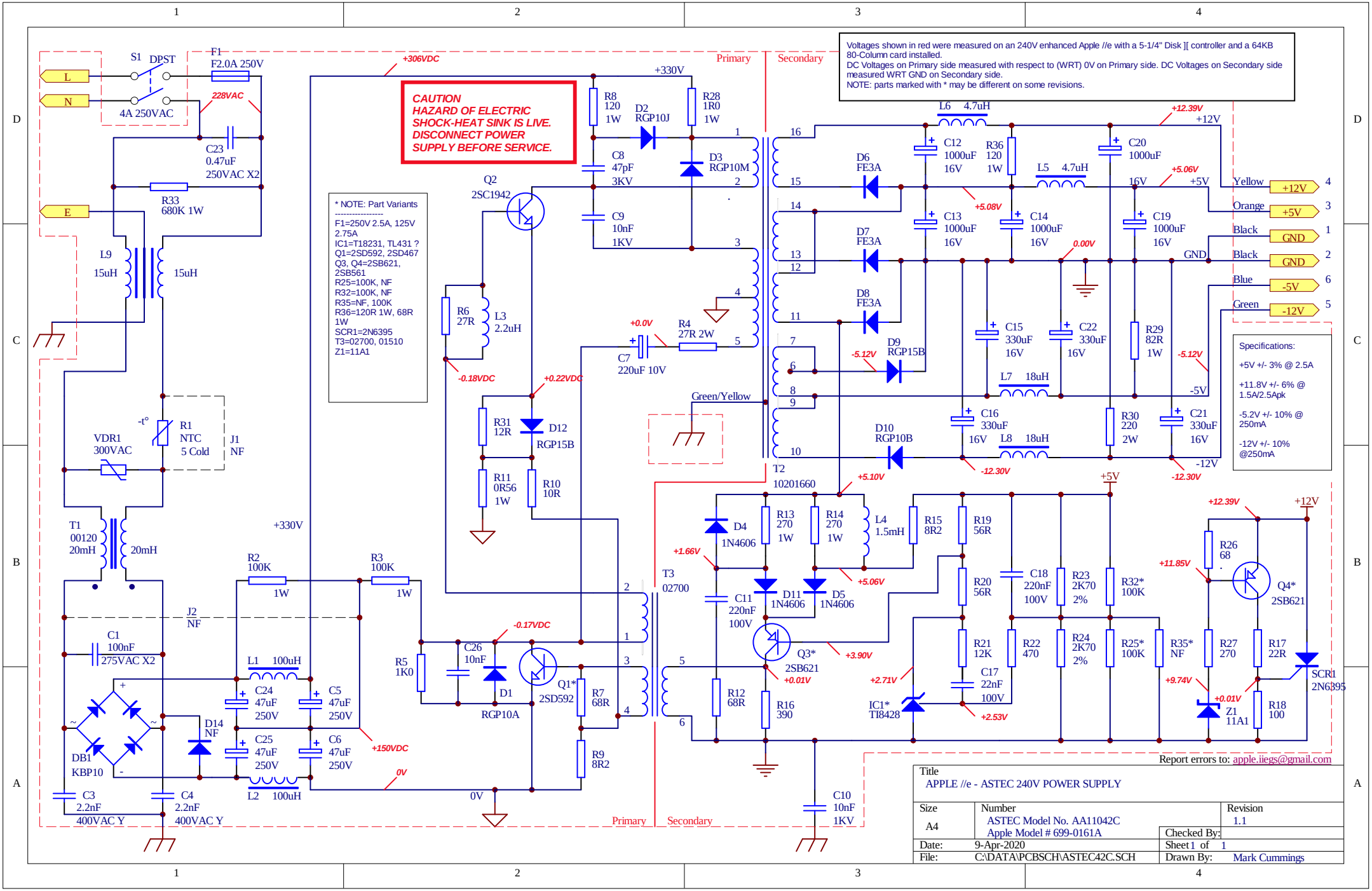
Voltages shown in red were measured on an 240V enhanced Apple //e with a 5-1/4" Disk][controller and a 64KB 80-Column card installed.
DC Voltages on Primary side measured with respect to (WRT) 0V on Primary side. DC Voltages on Secondary side measured WRT GND on Secondary side.
NOTE: parts marked with * may be different on some revisions.
CAUTION
HAZARD OF ELECTRIC SHOCK-HEAT SINK IS LIVE.
DISCONNECT POWER SUPPLY BEFORE SERVICE.
* NOTE: Part Variants
F1=250V 2.5A, 125V 2.75A
IC1=T18231, TL431 ?
Q1=2SD592, 2SD467
Q3, Q4=2SB621, 2SB561
R25=100K, NF
R32=100K, NF
R35=NF, 100K
R36=120R 1W, 68R 1W
SCR1=2N6395
T3=02700, 01510
Z1=11A1
Specifications:
+5V +/- 3% @ 2.5A
+11.8V +/- 6% @ 1.5A/2.5Apk
-5.2V +/- 10% @ 250mA
-12V +/- 10% @250mA
Primary
Secondary
S1 DPST
4A 250VAC
F1 F2.0A 250V
228VAC
+306VDC
+330V
C23 0.47uF 250VAC X2
R33 680K 1W
L9 15uH
15uH
VDR1 300VAC
R1 NTC 5 Cold
J1 NF
T1 00120 20mH
20mH
J2 NF
C1 100nF 275VAC X2
DB1 KBP10
C3 2.2nF 400VAC Y
C4 2.2nF 400VAC Y
R2 100K 1W
R3 100K 1W
L1 100uH
L2 100uH
C24 47uF 250V
C5 47uF 250V
C25 47uF 250V
C6 47uF 250V
D14 NF
+150VDC
0V
R8 120 1W
D2 RGP10J
R28 1R0 1W
C8 47pF 3KV
D3 RGP10M
C9 10nF 1KV
Q2 2SC1942
R6 27R
L3 2.2uH
-0.18VDC
+0.22VDC
R31 12R
D12 RGP15B
R11 0R56 1W
R10 10R
+0.0V
R4 27R 2W
C7 220uF 10V
Green/Yellow
R5 1K0
C26 10nF
-0.17VDC
D1 RGP10A
Q1* 2SD592
R7 68R
R9 8R2
T2 10201660
T3 02700
L6 4.7uH
L5 4.7uH
L7 18uH
L8 18uH
D6 FE3A
D7 FE3A
D8 FE3A
D9 RGP15B
D10 RGP10B
C12 1000uF 16V
R36 120 1W
C20 1000uF 16V
C13 1000uF 16V
C14 1000uF 16V
C19 1000uF 16V
C15 330uF 16V
C22 330uF 16V
R29 82R 1W
C16 330uF 16V
R30 220 2W
C21 330uF 16V
+12.39V
+12V
+5.06V
+5V
+5.08V
0.00V
GND
-5.12V
-5V
-12.30V
-12V
Yellow +12V 4
Orange +5V 3
Black GND 1
Black GND 2
Blue -5V 6
Green -12V 5
D4 1N4606
R13 270 1W
R14 270 1W
L4 1.5mH
R15 8R2
R19 56R
+5.10V
+1.66V
+5.06V
C11 220nF 100V
D11 1N4606
D5 1N4606
R20 56R
C18 220nF 100V
R23 2K70 2%
R32* 100K
Q3* 2SB621
+3.90V
+0.01V
R12 68R
R16 390
R21 12K
R22 470
R24 2K70 2%
R25* 100K
R35* NF
R27 270
R17 22R
+2.71V
IC1* TI8428
C17 22nF 100V
+2.53V
+9.74V
+0.01V
Z1 11A1
R18 100
R26 68
+11.85V
Q4* 2SB621
SCR1 2N6395
C10 10nF 1KV
Report errors to: apple.iiegs@gmail.com
Title
APPLE //e - ASTEC 240V POWER SUPPLY
Size A4
Number
ASTEC Model No. AA11042C
Apple Model # 699-0161A
Revision 1.1
Checked By:
Date: 9-Apr-2020
Sheet 1 of 1
File: C:\DATA\PCBSCH\ASTEC42C.SCH
Drawn By: Mark Cummings